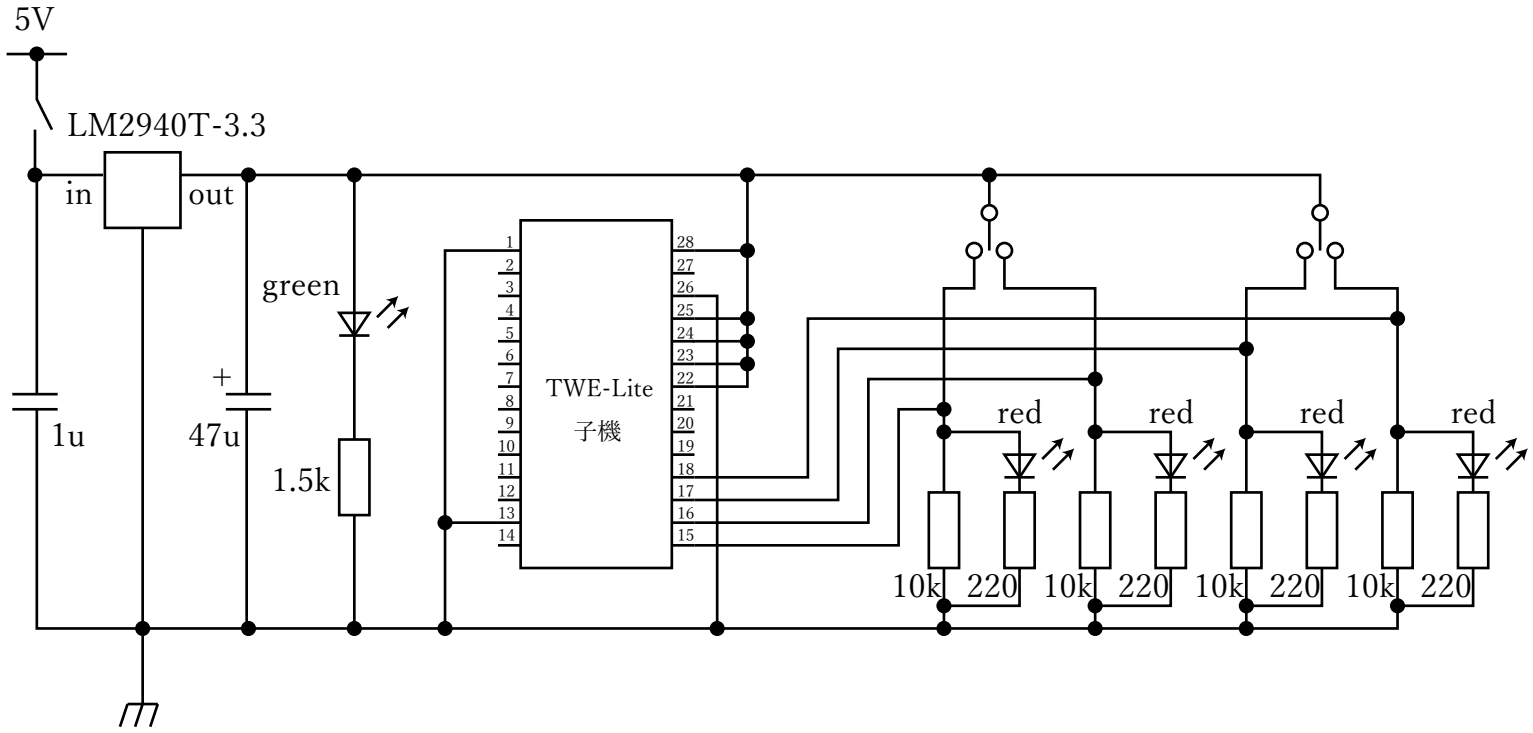
5V
LM2940T-3.3
in
out
1u
+
47u
green
1.5k
TWE-Lite
子機
1
2
3
4
5
6
7
8
9
10
11
12
13
14
28
27
26
25
24
23
22
21
20
19
18
17
16
15
red
red
red
red
10k
220
10k
220
10k
220
10k
220