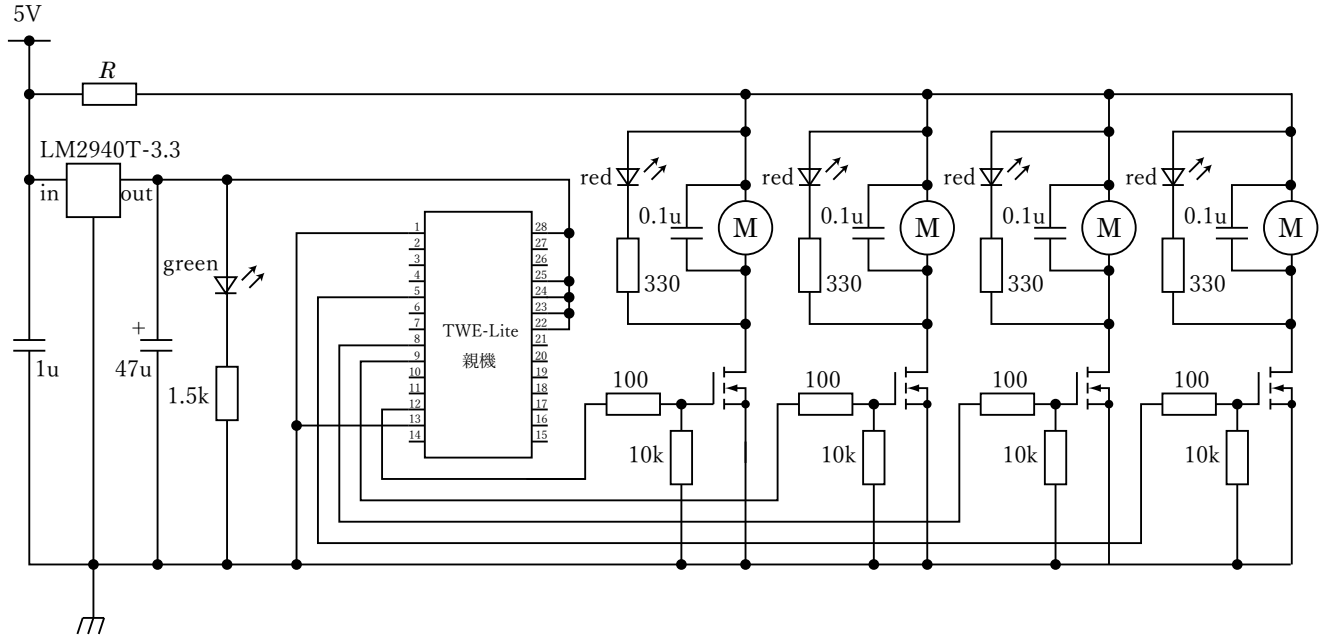
5V
R
LM2940T-3.3
in
out
1u
47u
green
1.5k
TWE-Lite
親機
red
0.1u
M
330
100
10k